Jigsaw
RUBBER MATTING

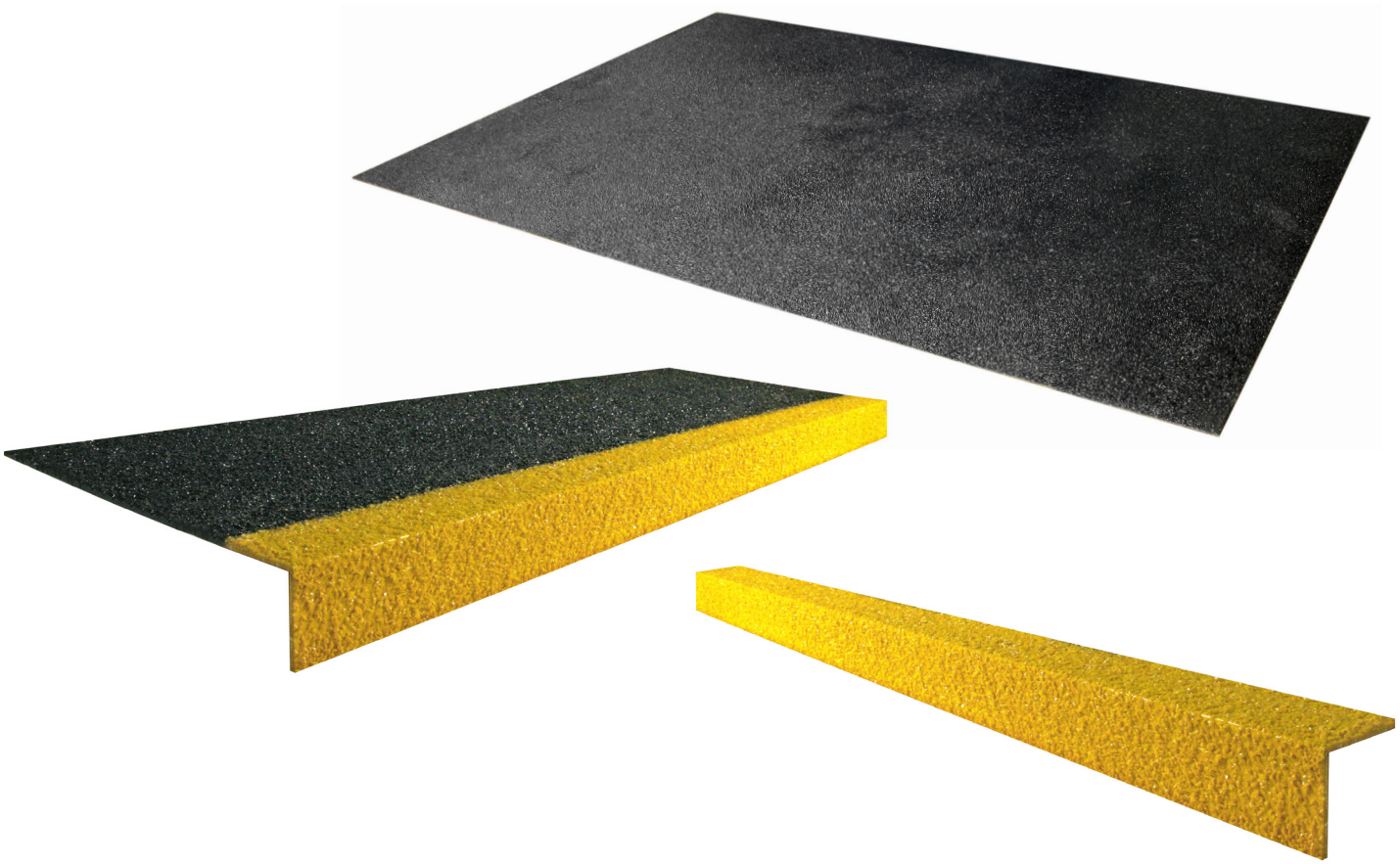

Installation Guidelines

COBAGRiP® Product Range

Equipment and Materials

When cutting and installing our **COBAGRiP®** products protective equipment should be worn at all times. Below is our recommended list of PPE Safety Equipment:

Bonding

- Eye Goggles / Spectacles
- Protective Gloves
- Safety Boots

Cutting & Mechanical Fixing

- P2 Type Dust Mask
- Protective Gloves
- Ear Defenders
- Overalls

Tools

- Marker, pencil or pen
- Drill
- Sandpaper
- Tape Measure
- Chalk Line
- Dust Pan & Brush
- Jigsaw with a tungsten carbide blade or grinder (with a stone or diamond tipped cutting disc)
- Stainless Steel Dome Head Screws
- Rawl Plugs
- EVO-STIK Sticks Like Sh*t - Adhesive Sealant
- Cordless Screwdriver



COBAGRiP® Sheet



COBAGRiP® Stair Tread



COBAGRiP® Stair Nosing

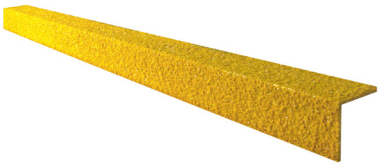

Preparation

Surface check

Ensure the area being covered is clean, dry and free from grease. Any damaged surface areas should be patch repaired to provide a reasonably flat and consistent surface, always consider dry laying the panels first to ensure they fit properly and evenly.

Cleaning & Maintenance

In order to maintain the effectiveness of the grit surface with regard to slip resistance, it is very important that the top surface is kept clean. Individual circumstances will vary but, generally a stiff hand brush and hot soapy water will achieve good results. Mild detergents can be used safely on the product, but it is advisable to test any cleaning products first. Where circumstances allow our fibreglass products can be power washed without causing harm. Care should be taken when the product has been stuck down and / or edge sealed as very high-pressure power washing or repeated power washing could cause damage to sealants and adhesives.

COBAGRiP® Cutting & Fitting Instructions

Cutting COBAGRiP®

We can do this for you, simply let us know the area you would like to cover.

If any localised trimming is required, we recommend the use of a jigsaw, preferably fitted with a tungsten carbide blade or alternatively an angle grinder with a diamond tipped cutting disc.

Should you wish to cut COBAGRiP® Sheet yourself, it can be easily cut to size using orbital cutting equipment with either a stone or diamond blade. Cutting should be carried out externally or where there is dust extraction or suitable ventilation and appropriate protective equipment should be worn.

It's very important to wear PPE Safety Equipment at all times, when working with this product.

Fixing COBAGRiP®

1. We recommend a double fixing method for installing COBAGRiP® Sheet, consisting of a high strength bonding adhesive and mechanical fixing. Generally, adhesive should be enough to secure COBAGRiP® Stair Treads and Nosings into position, but a double fixing method can be used if desired.

2. We recommend the use of **EVO-STIK Sticks Like Sh*t adhesive** for bonding our COBAGRiP® product range . EVO-STIK Sticks Like Sh*t adhesive is suitable for bonding to concrete, wood, metal and steel. When applying adhesive to the underside of a COBAGRiP® product, run a 6mm bead of adhesive 25mm from all edges, as well as zigzag across the centre approx. 200mm apart.

3. Always ensure that the bolt length is slightly longer than the rawl plug length to obtain a good fixing. Put a little sealant in the hole to seal around the screws if a water tight seal is required.

4. If holes are to be drilled on site it is recommend to use a 4mm HSS masonry drill bit from the underside.

Adhesive Application

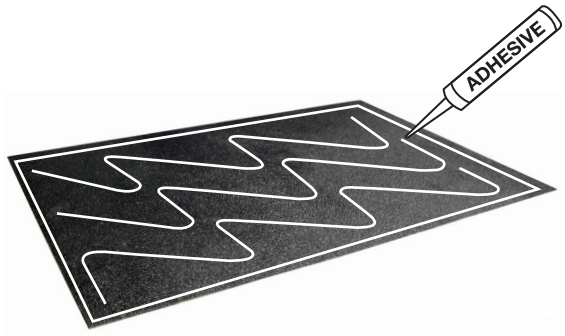

Mechanical Fixing

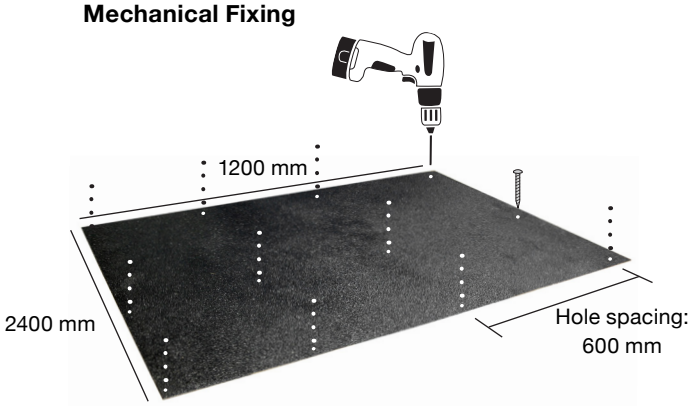

When fixing COBAGRiP® Sheet, drill holes in all 4 corners with additional holes for fixings approximately every 600mm. Holes need to be located 70mm away from the front edge and 60mm from the back edge.

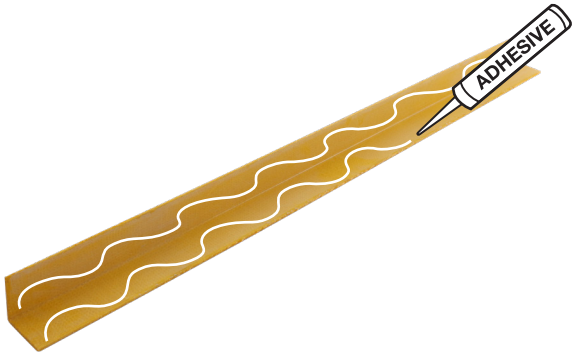

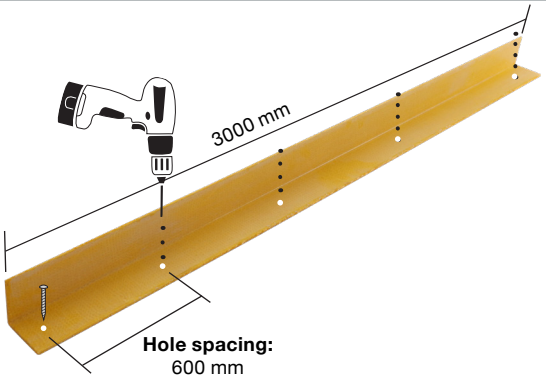

The fixing points for COBAGRiP® Stair Nosings need to start at either end of the Stair Nosing with additional fixings points approximately every 600mm.

Fixing COBAGRiP® Stair Tread - Concrete

Adhesive Application

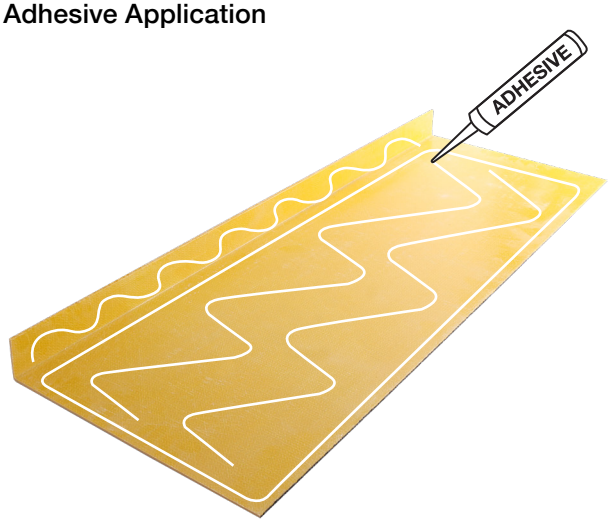

Mechanical Fixing

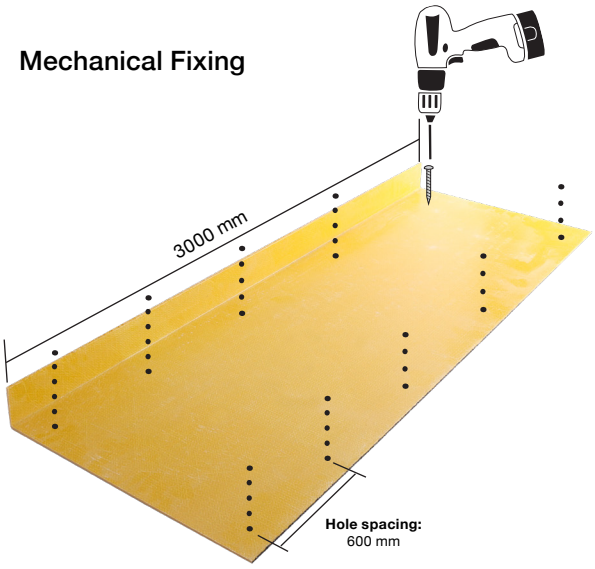

The fixing points for COBAGRiP® Stair Treads need to be in all 4 corners, with additional holes for fixings approximately every 600mm. Holes will need to be drilled 70mm in from the front edge and 60mm in from the back edge.

Fixing COBAGRiP® Stair Tread - Open Mesh Grating

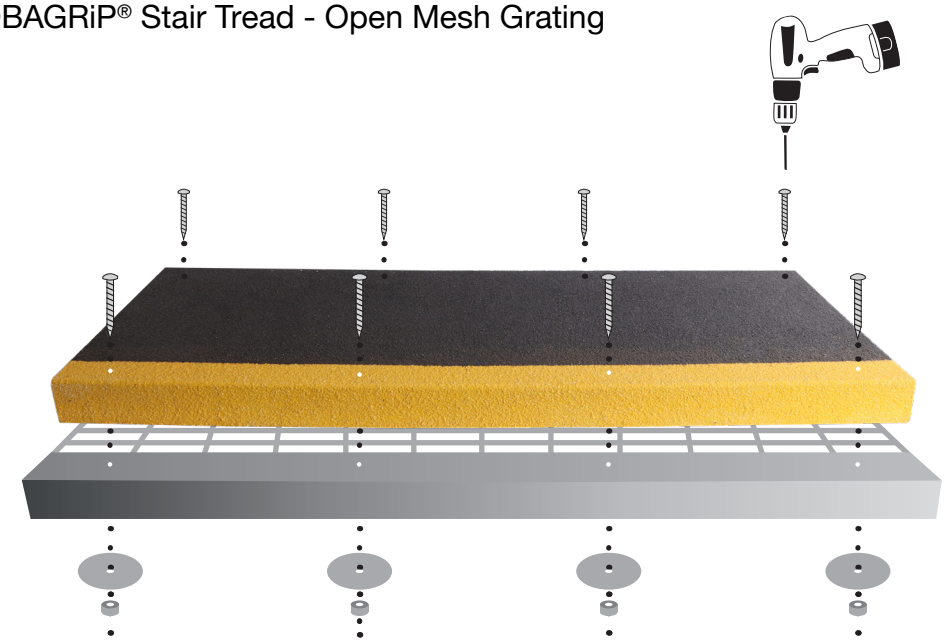

Install using the same fixing points above, then use universal saddle clip assemblies with slotted truss head bolt, nut and lock washer (all stainless steel).

Disclaimer

These methods of installation make no claim to being comprehensive but should be used as a guide. Always employ safe practices. A risk assessment and method statement should always be prepared.

If in doubt please contact us:

01260 272313 | info@rubber-matting.co.uk